Dwight Look College of
ENGINEERING
TEXAS A&M UNIVERSITY

Sound Localization Robot 5, Team 23

Samuel Lackey, Sanjana Pasumarthi,
Lucas Kettler, Joshua Teele

TA: Muhammad Bin Mughees
Sponsor: Dr. Moreira

Project Scope

Figure 1. First responder crawls through smoke and broken glass to rescue elderly man from house fire (Independent TV)

- Keeps **first responders safe** by entering hazardous or toxic areas first.
- **Reduces search and rescue time** by avoiding exploring unnecessary paths
- **Reliable in low-visibility** or high-stress conditions (smoke, debris, noise).

Problem: First Responders lack reliable methods for navigating dangerous environments, where visibility is limited, putting both their safety and the victims at risk.

Our Solution: Building a Sound Localization robot that can hear distress calls, pinpoint their direction, and move toward them autonomously, allowing first responders to focus on saving lives instead of risking theirs.

*A smarter, safer, and faster way to locate victims, all while protecting rescuers and saving more lives.

Robot Sub Systems:

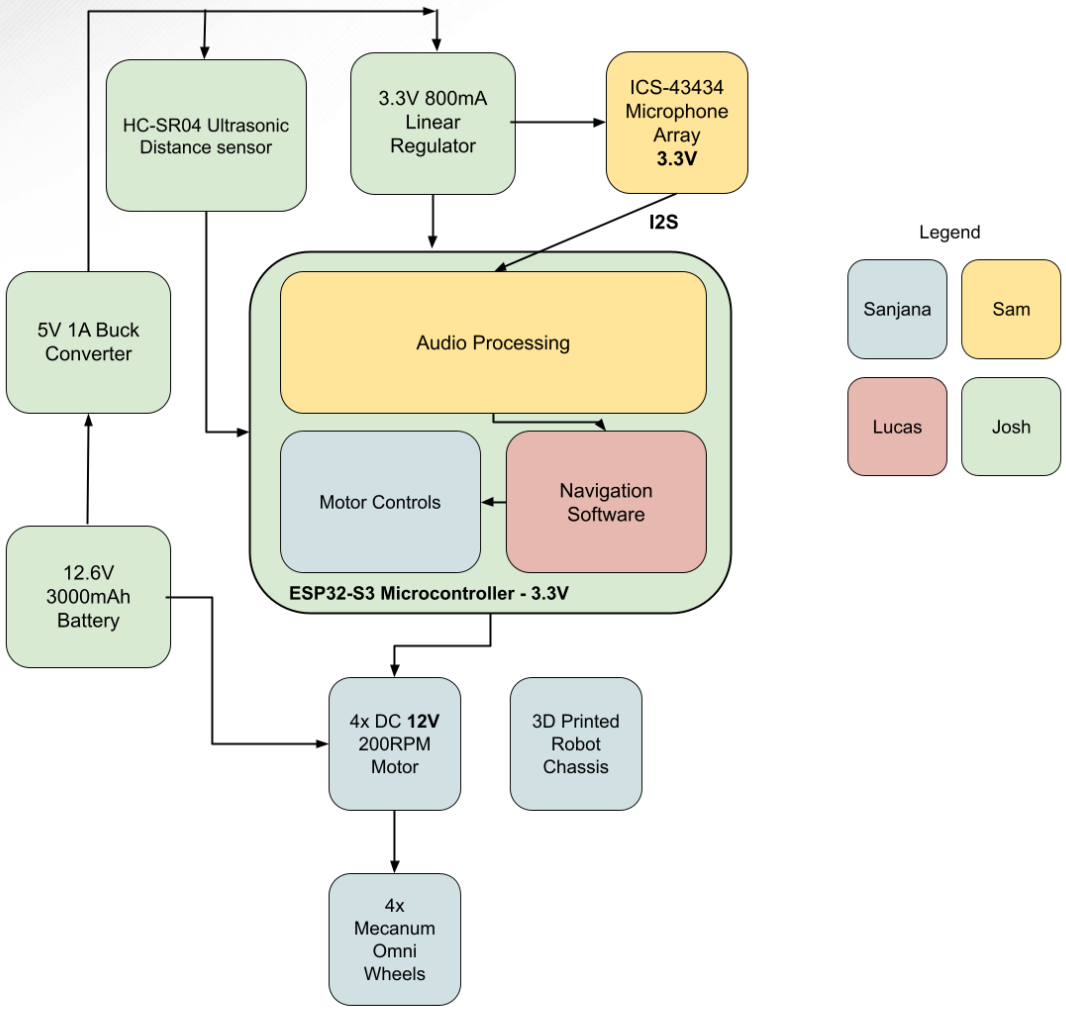

Major Project Implementations for 404

- No longer using 3.3V buck converter
- Changed from circular mic array to new designed mic array
- Integrated webapp with information portraying: location, angle, distance, current direction movement, alert user once destination is reached, and controls.
- Robot will move to sound source in & out of sight, and avoid obstacles
- Robot movement with periodical listening capability

Dwight Look College of ENGINEERING TEXAS A&M UNIVERSITY

Project Timeline

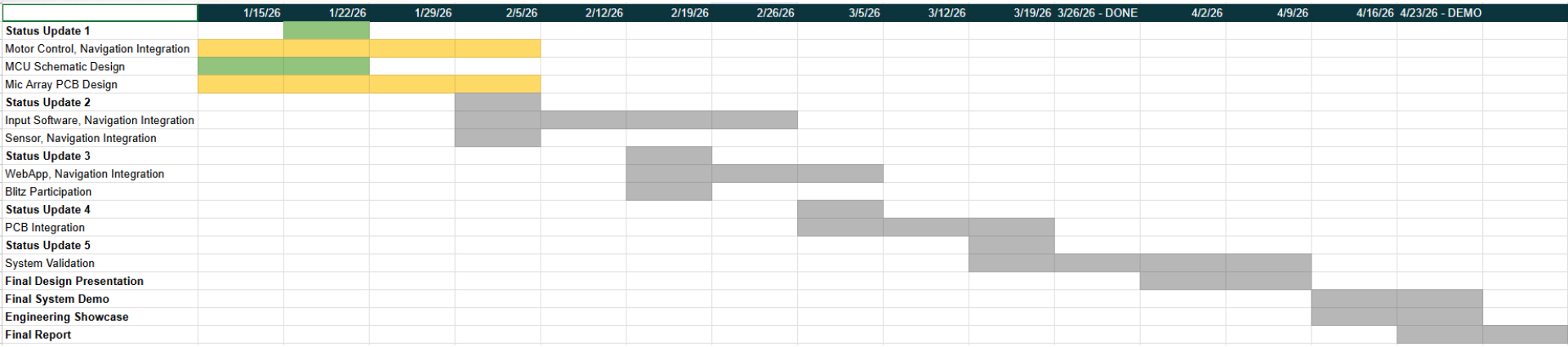

Input Signal Software

Samuel Lackey

Accomplishments since 403 5 Hours of Effort	Ongoing progress/problems and plans until the next presentation
• Algorithm detects angles within 3.6° • A specific frequency can be isolated • A rough distance can be calculated • Completed schematic for Microphone Array	• Complete PCB layout for microphone array • Work with Lucas to merge codebase

Dwight Look College of ENGINEERING TEXAS A&M UNIVERSITY

Input Signal Software

Samuel Lackey

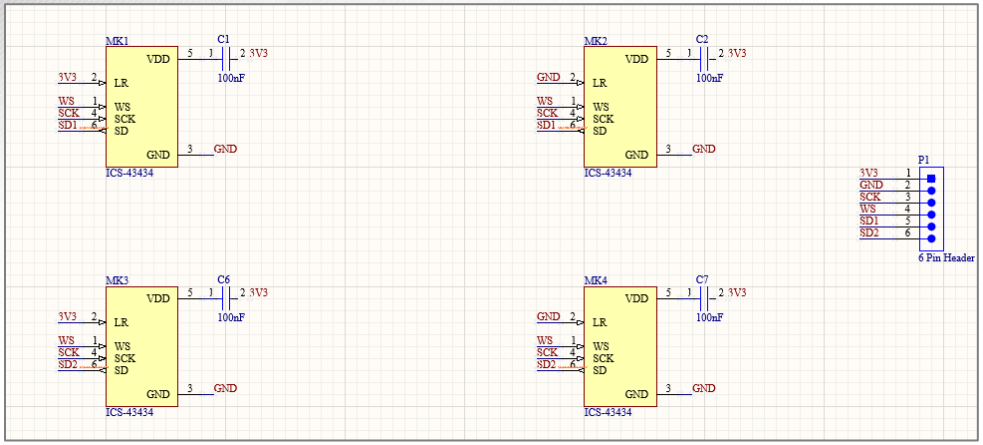

Microphone Array PCB Schematic

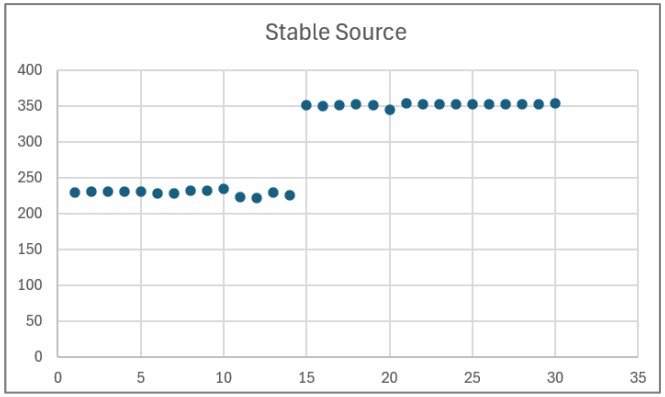

Microphone Array Angle Test

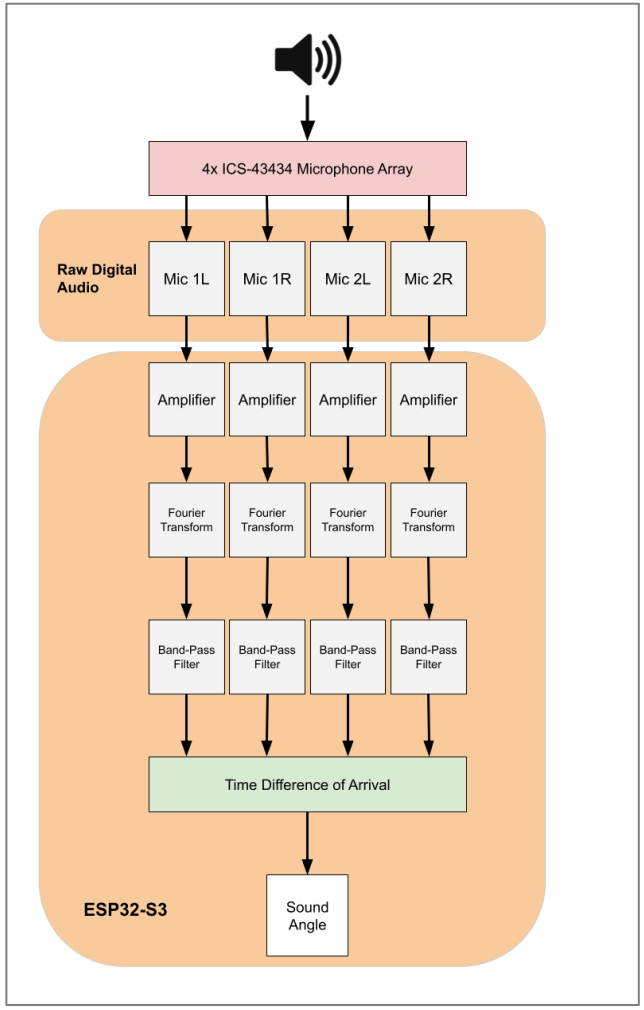

Mechanical/ Motor Controls Subsystem

Sanjana Pasumarthi

Accomplishments since 403 6 hours of effort	Ongoing progress/problems and plans until the next presentation
• Sound rover moves in all directions, given the remote command from website, in-built LED to show connectivity status • All parts such as the base, motor clamps and wheel shafts are 3D printed • Established local Wi-Fi connection on ESP32, stable at 20 feet radius, response speed of 0.24 seconds	• Have a verified design for an PCB that integrates the power and the motor controls • Integrating the motor control firmware with the navigation & input signal software • Update design & 3D print parts for rover

Mechanical/ Motor Controls Subsystem

Sanjana Pasumarthi

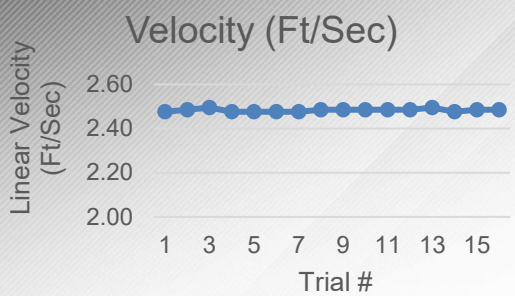

Mean: 2.4831 +/- 0.0064 Ft/ Sec

Forward/ Backward Directions

*measured distance of 6.5 ft

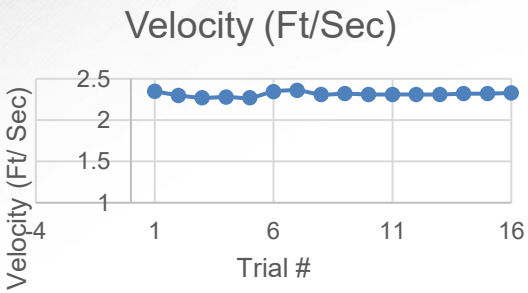

Mean: 2.3135 +/- 0.0258 Ft/ Sec

Left/ Right Directions

*measured distance of 6.5 ft

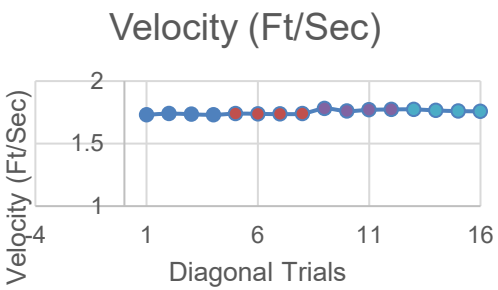

Mean: 1.7158 +/- 0.0173 Ft/ Sec

Diagonal Directions

*measured distance of 1 ft

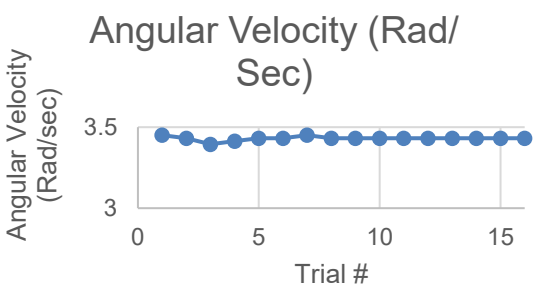

Mean: 3.4305 +/- 0.0126 Rad/Sec

Linear Velocity (3.5 in. ~ 0.2961 ft)
Mean: 0.1592 +/- 0.0005 Ft/Sec

measured time for one complete rotation (2π radians)

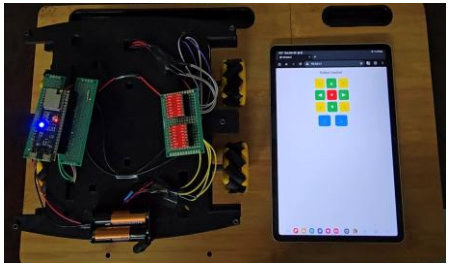

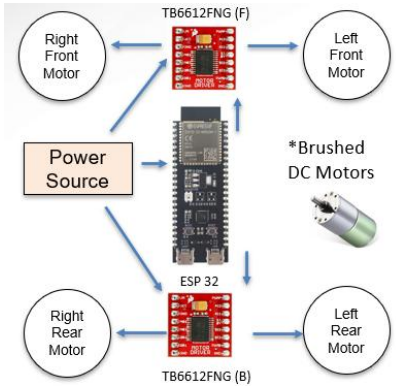

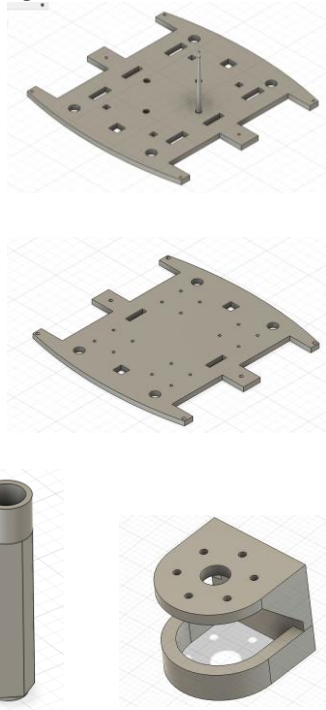

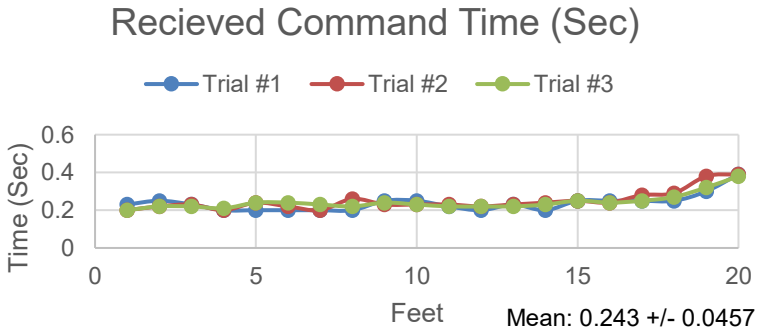

Mean: 0.243 +/- 0.0457 Sec

Navigation Software Subsystem

Lucas Kettler

Accomplishments since 403 6 hrs of effort	Ongoing progress/problems and plans until the next presentation
• Implementation of incremental A* algorithm with grid mapping and real time expansion • Wide range of simulations completed using LEDs and simulated sensor input	• Integration of code with Motor Controls/WebApp Code • Integration of code with Input Software Code

Navigation Software Subsystem
Lucas Kettler

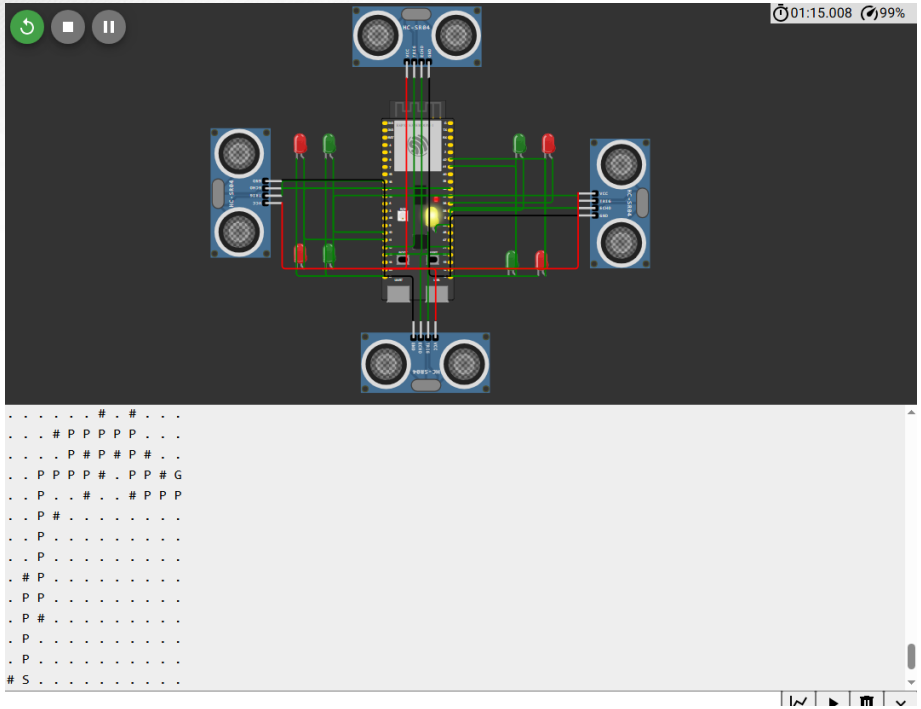

- Red LED – Backwards
- Green LED – Forwards
- Yellow LED – Obstacle
- Logic works as intended but requires many changes to be adapted to a real-world robot

Power & Distance Sensor Subsystem

Joshua Teele

Accomplishments since 403 6 hrs of effort	Ongoing progress/problems and plans until the next presentation
• Completed schematic for MCU PCB • Designed, soldered, and tested 3.3V and 5V buck converter (403) • Created code for distance sensors (403)	• Finish designing and routing MCU PCB • Integrate distance sensor code with navigation software

Dwight Look College of
ENGINEERING
TEXAS A&M UNIVERSITY

Power & Distance Sensor Subsystem

Joshua Teele

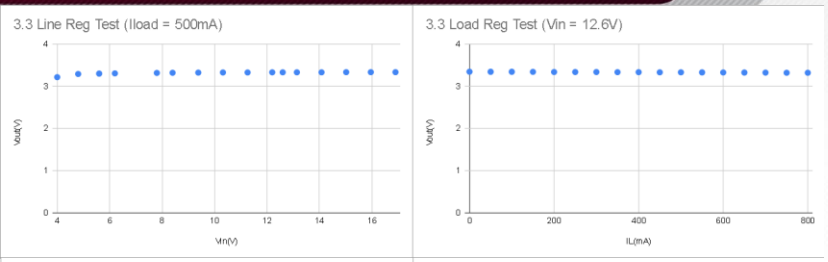

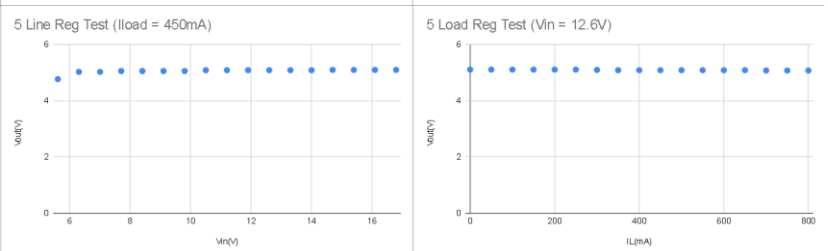

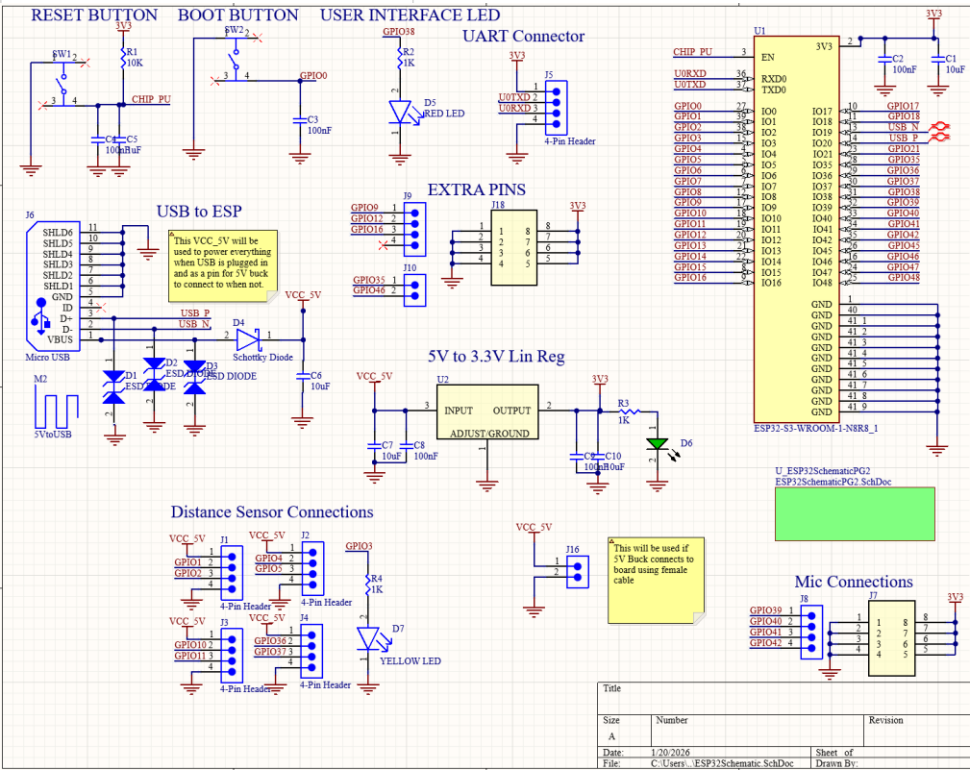

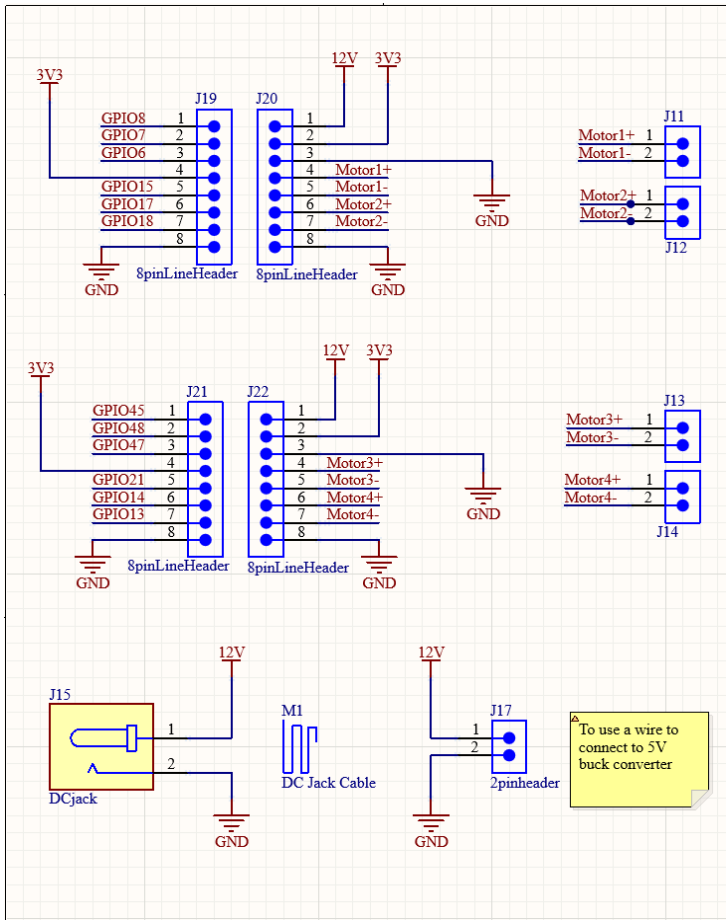

Parts and PCB

Part	Est. Arrival
MCU PCB	Feb 26th
Components for MCU PCB	Feb 19th
Microphone Array PCB	Feb 26th
4x ICS-43434 Mics	Feb 19th
4x 0.1μF Capacitor	Feb 19th

Dwight Look College of ENGINEERING TEXAS A&M UNIVERSITY

Execution Plan

Tests	1/15/26	1/22/26	1/29/26	2/5/26	2/12/26	2/19/26	2/26/26	3/5/26	3/12/26	3/19/26	3/26/26 - DONE
Motor Controls Subsystem ~ Sanjana Pasumarthi											
Design and 3D Print Proper Wheel Shaft											
Design integrated PCB w/ Josh for power and motor controls											
Design and 3D Print Top Layer											
Integrate Sound Rover Firmware with Navigation & Sound Software & Test Rover											
Navigation Software Subsystem ~ Lucas Kettler											
Integrate with Input Signal Code											
Integrate with Sensor Code											
Integrate with Motor Control Code											
Adapt Grid map for use with web app											
Adapt code from simulation to Real test code											
Power & Distance Sensor Subsystem ~ Joshua Teele											
Design MCU Board											
Solder PCBs											
Integrate Sensor Code with Lucas											
Input Signal Subsystem ~ Samuel Lackey											
Integrate Input Signal Software with Navigation											
Finalize all Software Integration											
Design Microphone Array PCB											
Solder and Connect PCB to Team system											

Validation Plan

Paragraph	Test Name	Success Criteria	Methodology	Status	Responsible Engineer(s)
3.2.1.1	DOA Angle Accuracy	All 5 tests must log a detected angle within an 3.6°	Place speaker playing 450Hz tone at a known angle, and 0.5m distance. Run the detection test 5 times	UNTESTED	Sam
3.2.1.2	DOA With Background Noise	All 5 tests must log a detected angle within an 3.6°	Place speaker playing 450Hz tone at a known angle, and 0.5m distance while separate 550Hz tone is playing. Repeat 5 times	UNTESTED	Sam
3.2.1.3	Obstacle Detection	Verify robot halts movement at the node prior to an object	Isolated test with robot attempting to drive to a goal behind an obstacle	UNTESTED	Lucas, Joshua, Sanjana
3.2.1.4	Grid Mapping	Verify the robot updates a grid map for the web app	View output of webapp upon completion of path	UNTESTED	Lucas, Sanjana
3.2.1.5	Webapp	The webapp must show the angle, estimated distance, and control the robot.	Run the program and connect to wifi, trigger a sound, access the webapp, and move.	UNTESTED	Sam, Sanjana
3.2.1.6	Distance Estimation	The estimated distance must be less than 0.5m of the true distance	Run the distance calibration software, move sound source from 0.5 to 1m to 2m.	UNTESTED	Sam
3.2.2.1	Accurate Robot Movement	Robot moves in intended direction determined by program	Series of coordination tests for the robot to move to the sound source	UNTESTED	Full Team
3.2.2.2	Constant Response rate of robot	Robot has a constant rate of response with +/- 5% of average time	Multiple trials of measuring time it takes for rover to change status	UNTESTED	Full Team
3.2.2.3	Structurally strong Robot	Wheel shaft does not break easily, no unintended movement from motors	Test robot with obstacles and quick movement	UNTESTED	Sanjana
3.2.3.3.1	Input Voltage(USB)	Ensure voltage at USB port is above 4.75V (minimum needed voltage for linear regulator)	Use multimeter to test output of buck converter	UNTESTED	Joshua
3.2.3.3.2	Input Voltage(DC jack)	Ensure voltage at DC jack is between 10.8 and 13.2 V (+/-10% of motor voltage)	Use multimeter to test output of buck converter	UNTESTED	Joshua
N/A	Full System Demo	Robot is able to navigate autonomously around obstacles, reach goal, and display data on app	Multiple observations and trials of robot	UNTESTED	Full Team

Thank You,
Any Questions

Sound Localization Robot 5 – Team 23

Lucas Kettler, Samuel Lackey, Joshua Teele,
Sanjana Pasumarthi